Technical Information
TI 051D/06/en
50097004

Electromagnetic Flow Measuring System – Two-wire, loop-powered *PROline promag 23 H*

Flow measurement in hygiene, food and beverage or process applications

Features and benefits
- Nominal diameters DN 2...100
- PFA lining for cleaning temperatures up to +150 °C (+180 °C in preparation)
- Guaranteed product quality, because suitable for CIP/SIP cleaning and piggable
- 3A approval and EHEDG-tested
- Measuring accuracy: ± 0.5%
- Robust field housing, IP 67
- “Touch control”: operation without opening the housing - also in Ex environment
- Communication: HART is standard
- Intrinsically safe Ex ia for installation in zone 1 (ATEX, FM, CSA, etc.)
- Transmitter supply:
  – Non-Ex environment: 12...30 V DC
  – Ex environment: 13.9...30 V DC
- Connecting to all mainstream transmitter power supplies and input cards of process control systems
- Reduced installation and operation costs

Application
All fluids with a minimum conductivity of ≥ 50 µS/cm can be measured:
- beverages, e.g. fruit juice, beer, wine
- salt solutions
- acids, alkalis, etc.

Endress+Hauser
The Power of Know How

Function and system design

Measuring principle

Faraday's law of induction states that a voltage is induced in a conductor moving in a magnetic field.
In electromagnetic measuring, the flowing medium corresponds to the moving conductor. The induced voltage is proportional to the flow velocity and is detected by two measuring electrodes and transmitted to the amplifier. Flow volume is computed on the basis of the pipe's diameter. The constant magnetic field is generated by a switched direct current of alternating polarity.

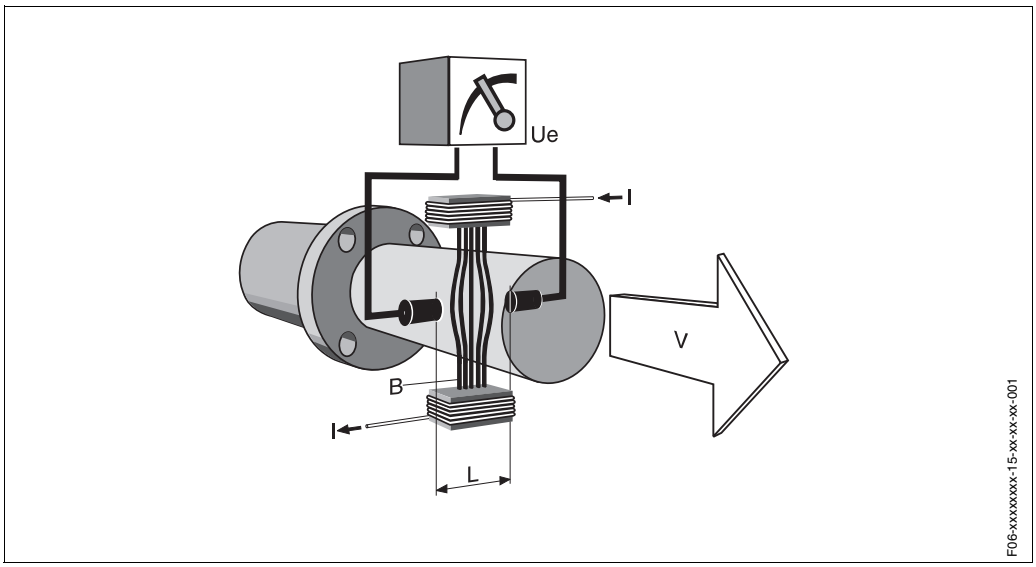

Ue = B · L · v
Q = A · v

Ue = induced voltage
B = magnetic induction (magnetic field)
L = electrode gap
v = flow velocity
Q = volume flow
A = pipe cross-section
I = current

Measuring system

The measuring system consists of a transmitter and a sensor.
Compact version: transmitter and sensor form a single mechanical unit.

- Transmitter:
Promag 23 ("Touch Control" without opening the housing, four-line display).

- Sensor:
Promag H (DN 2…100)

Input

Measured variable

Flow rate (proportional to induced voltage)

Measuring range

Typically v = 0.01...10 m/s with the specified measuring accuracy

Operable flow range

Over 1000 : 1

Output

Output signal

- Current output:
  Applied direct current 4...20 mA, input from DC voltage source.
  Terminal voltage: 12...30 V DC, 13.9...30 V DC (Ex i)

- Frequency output:
  Open collector, passive, galvanically isolated, 30 V DC, 100 mA (250 mA / 20 ms)

  Optional configurable as:
  – Frequency output:
    Full scale frequency 500...10000 Hz (f_{max} = 12.5 Hz)
  or
  – Pulse output:
    Pulse value and pulse polarity adjustable, pulse width adjustable (0.01...10 s), pulse frequency max. 50 Hz
  or
  – Status output:
    E.g. for error messages, Empty Pipe Detection, flow direction recognition, limit value configurable

- Ex i version:
  – Power-supply, signal circuits and pulse output with "intrinsically safe" protection rating, EEx ia IIC and EEx ia IIB, only for connection to certified, intrinsically safe circuits with the following maximum values: U_i = 30 V, I_i = 150 mA, P_i = 810 mW
    Effective internal inductance: negligible
    Effective internal capacitance: $C_i \leq 25$ nF
  – Pulse output:
    Maximum values: U_i = 30 V, I_i = 10 mA, P_i = 1 W
    Effective internal inductance: negligible
    Effective internal capacitance: negligible

Signal on alarm

- Current output → failure response selectable
- Pulse/frequency output → failure response selectable
- Status output → “non-conductive” by fault or power supply failure

Load

see Page 5

Low flow cutoff

Switch points for low flow cut off are selectable.

Galvanic isolation

Outputs are galvanically isolated from sensor and from each other.

Power supply

Electrical connection measuring unit

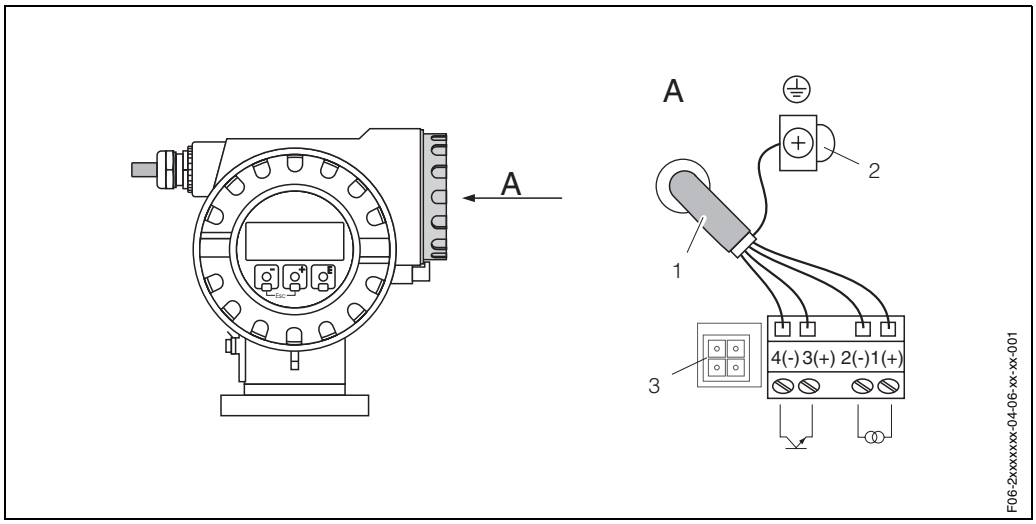

1 *Shielded signal cable (the Ex version requires the use of separate cables for transmitter supply and frequency output):*
*Terminal **No. 1(+) / 2(–)**: transmitter supply / current output*
*Terminal **No. 3(+) / 4(–)**: frequency output*
2 *Grounding terminal for signal-cable shield*
3 *Service plug*

Outputs	**Terminal No.**	
Order variant	**1(+) / 2(–)**	**3(+) / 4(–)**
23***-**********W	*Current output HART*	–
23***-**********A	*Current output HART*	*Frequency output*

Mandatory:
A common connecting cable carries supply voltage and measuring output signal:
Current output (passive)
galvanically isolated: 12...30 V DC (Ex i: 13,9...30 V DC), 4...20 mA

Optional:
A binary output can be used as an option. It can be configured as a standard impulse output, a frequency output or a switching output:
Frequency output (passive)
galvanically isolated: max. 30 V DC, 100 mA, Open Collector
- Frequency operating mode: limit frequency 500...10000 Hz (f_{max} = 12500 Hz)
- Pulse operating mode: pulse frequency max. 50 Hz
- Status operating mode: yes

We recommend shielded signal cables as a general principle.

Load

The load has to be calculated as follows:

Non Ex area: $R_L[\Omega] = \frac{U_S[V] - U_V[V]}{I_M[A]} = \frac{U_S[V] - 12[V]}{0,022[A]}$

Ex area (Ex i): $R_L[\Omega] = \frac{U_S[V] - U_V[V]}{I_M[A]} = \frac{U_S[V] - 13,9[V]}{0,022[A]}$

$R_L[\Omega]$ = max. load resistance, load (cable resistance)
$U_S[V]$ = external supply voltage of 12...30 V DC (outgoing supply voltage, transmitter supply unit)
$U_V[V]$ = min. supply voltage of 12 V DC
min. supply voltage of 13,9 V DC (Ex i)
(required supply voltage, transmitter)
$I_M[A]$ = max. signal transmission current
(failsafe mode current output: 22 mA max. current)

Hinweis!
The minimum load resistance (R_L) necessary for a data transfer via HART protocol by way of the current signal cable is 250 Ω. The minimum external supply voltage (U_S) therefore has to be 17,5 V DC (non Ex).

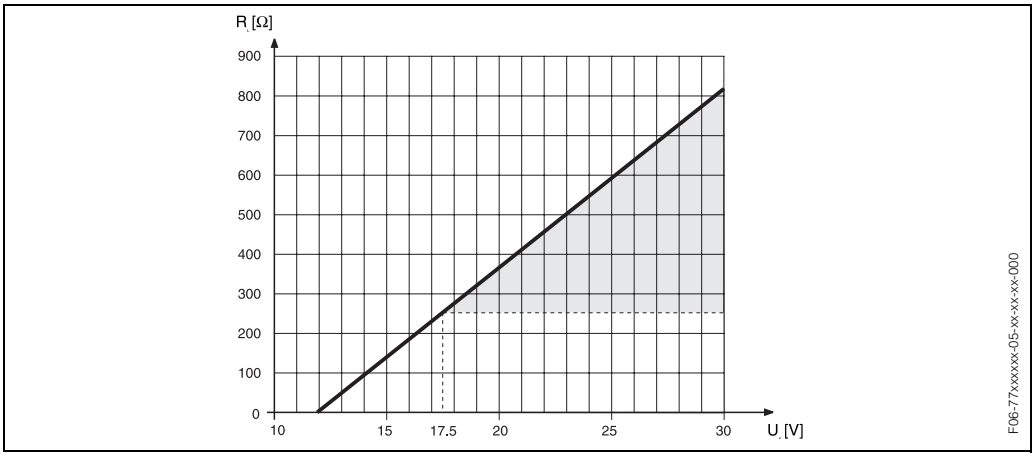

Load at the analog current output (non Ex)
– R_L – max. load resistance (with HART: min. 250 Ω)
– U_S – external supply voltage (non Ex)

Cable entry

- Cable entry M20 x 1.5 (8...12 mm)
- Threads for cable entries, Pg 13.5 (5...15 mm), 1/2" NPT, G 1/2"

Cable specifications

Use shielded cables.

Supply voltage

Non-Ex area: 12...30 V DC (with HART: 17.5...30 V DC)
Ex area (Ex i): 13.9...30 V DC (with HART: 19.4...30 V DC)

Power supply failure

- T-DAT™ saves measuring system data if power supply fails
- S-DAT™: exchangeable data storage chip which stores the data of the sensor (nominal diameter, serial number, calibration factor, zero point, etc.)

Potential equalisation

Perfect measurement is only ensured when the medium and the sensor have the same electrical potential.

Metal process connections
Potential matching usually takes place over the metallic process connection in contact with medium process connections which are directly mounted on the measuring transmitter. This usually means that additional potential matching measures are unnecessary.

Hinweis!
For installation in metal pipes, it is advisable to connect the ground terminal of the transmitter housing to the piping.

Plastic process connections
For plastic process connections, potential matching must be ensured between sensor and medium using additional ground rings. If these ground rings are missing, this can influence accuracy or destroy the measuring transmitter through the electrochemical decomposition of electrodes.

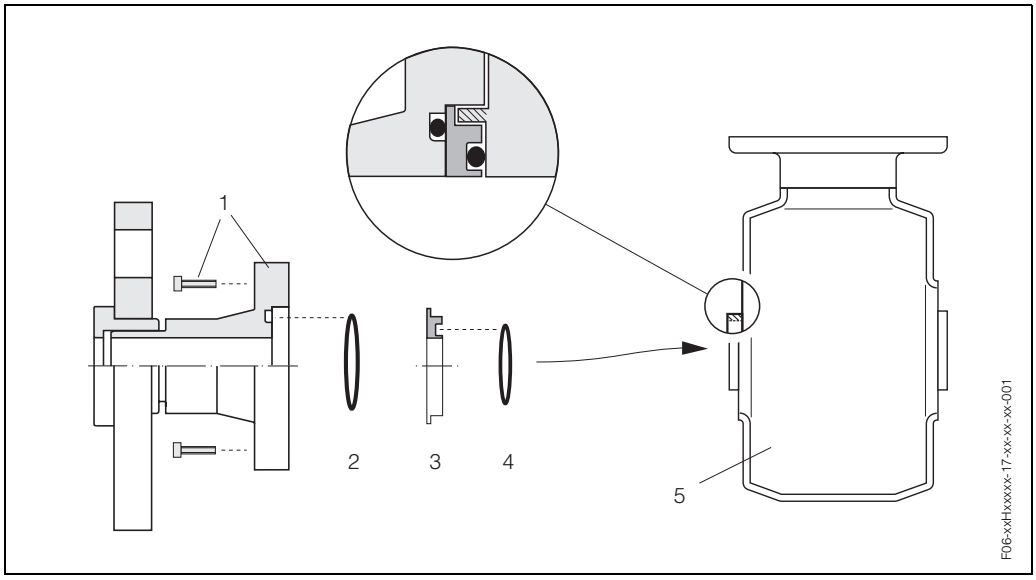

1 = allen screw (process connection), 2 = O-ring seal (process connection),
3 = plastic washer (spacer) or ground ring, 4 = O-ring seal (ground ring),
5 = sensor

When using ground rings, note the following points:
- Depending on the option ordered, plastic washers may be installed at the process connections instead of ground rings. These plastic washers serve only as spacers and have no potential equalization function. In addition, they provide a sealing function at the interface between the sensor and process connection. For this reason, with process connections without ground rings, these plastic washers/seals must not be removed, or must always be installed.
- Ground rings can be ordered separately from E+H as an accessory.
  Also make sure that the ground rings are compatible with the electrode material. Otherwise the danger exists that the electrodes could be destroyed by electrochemical corrosion. You can find material data on Page 27.
- Ground rings, incl. seals, are mounted inside the process connection.
  This has no influence on the installation length. You can find the dimensions of ground rings on Page 23.

Measuring accuracy

Reference operating conditions

To DIN 19200 and VDI/VDE 2641:
- Medium temperature: +28 °C ± 2 K
- Ambient temperature: +22 °C ± 2 K
- Warm-up period: 30 minutes

Installation:
- Inlet run >10 x DN
- Outlet run > 5 x DN
- Sensor and transmitter grounded.
- Sensor centered relative to the pipe.

Max. measured error

Signal output: ± 0.5% o.r. ± 4 mm/s (o.r. = of reading)
Supply-voltage fluctuations have no effect within the specified range.

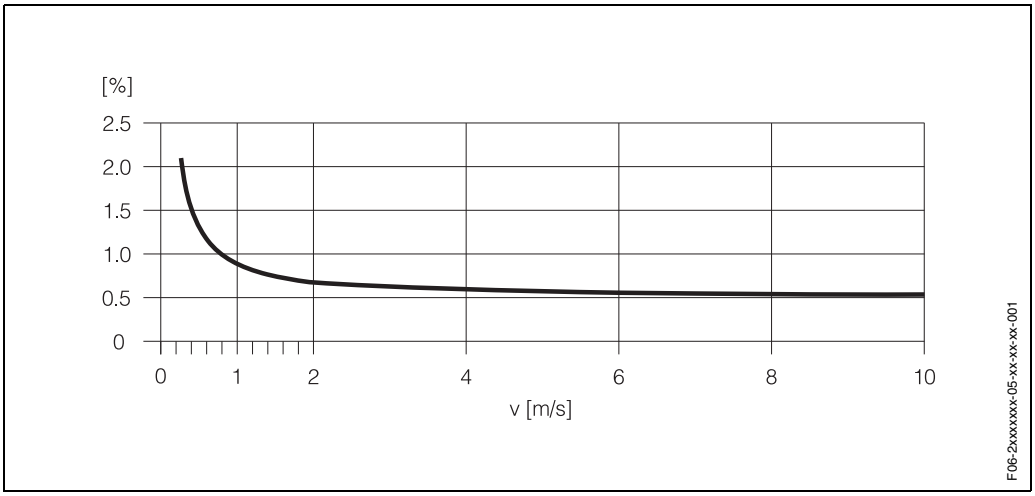

Max. measured error in [%] of reading

Repeatability

max. ± 0.25% o.r. ± 2 mm/s (o.r. = of reading)

Installation conditions

Installation instructions

Mounting location

Correct measuring is possible only if the pipe is full. Avoid the following locations:
- Highest point of a pipeline. Risk of air accumulating.
- Directly upstream from an open pipe outlet in a down pipe.

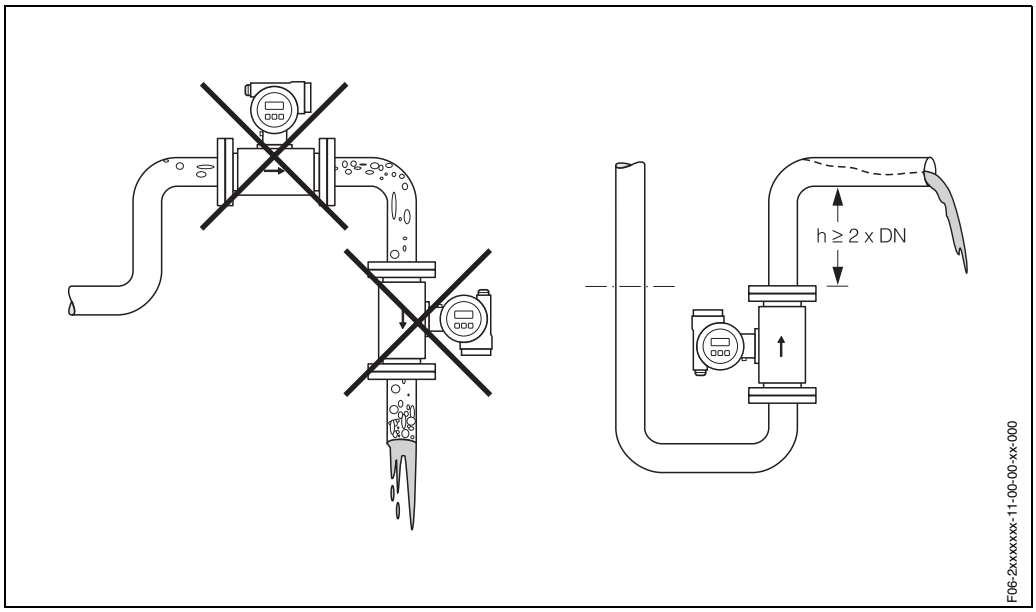

Installation of pumps

Do not install the sensor on the intake side of a pump. This precaution is to avoid low pressure and the consequent risk of damage to the lining of the measuring tube.
It might be necessary to install pulse dampers in systems incorporating reciprocating, diaphragm or peristaltic pumps. Information on the measuring system's resistance to vibration and shock can be found on Page 13.

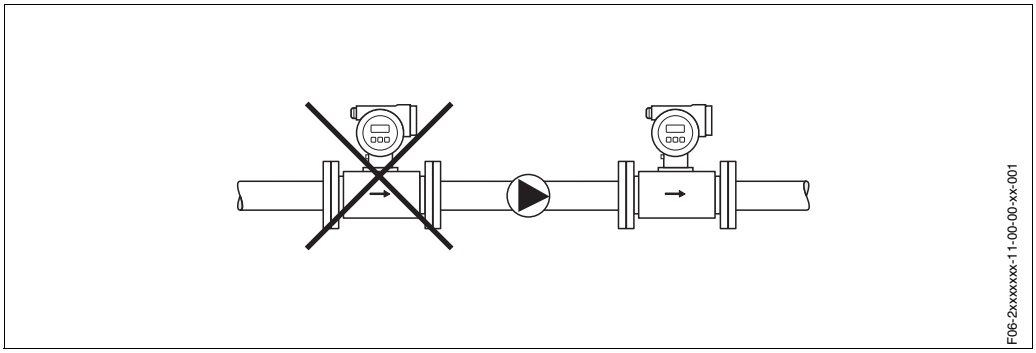

Partially filled pipes
Partially filled pipes with gradients necessitate a drain-type configuration. The Empty Pipe Detection (EPD) function offers additional protection by detecting empty or partially filled pipes.

Achtung!
Risk of solids accumulating. Do not install the sensor at the lowest point in the drain. It is advisable to install a cleaning valve.

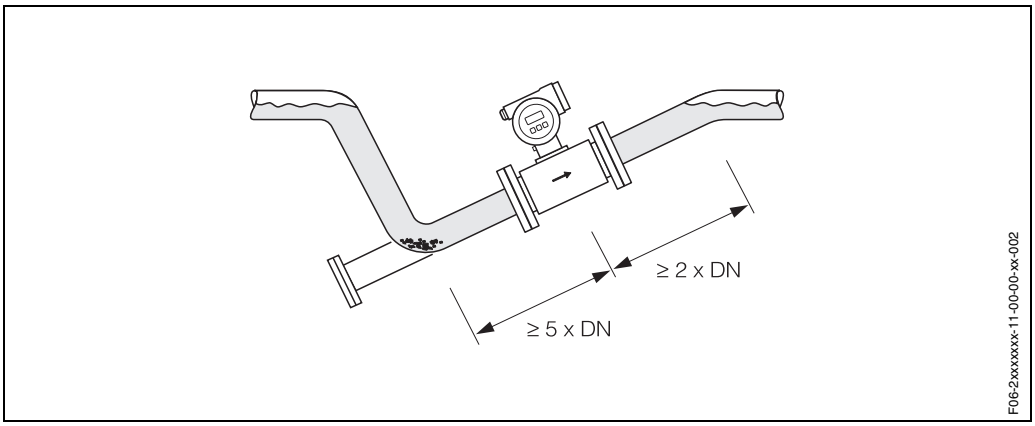

Down pipes
Install a siphon (2) or a vent valve (1) downstream of the sensor in down pipes longer than 5 meters. This precaution is to avoid low pressure and the consequent risk of damage to the lining of the measuring tube. This measures also prevent the system losing prime, which could cause air inclusions.

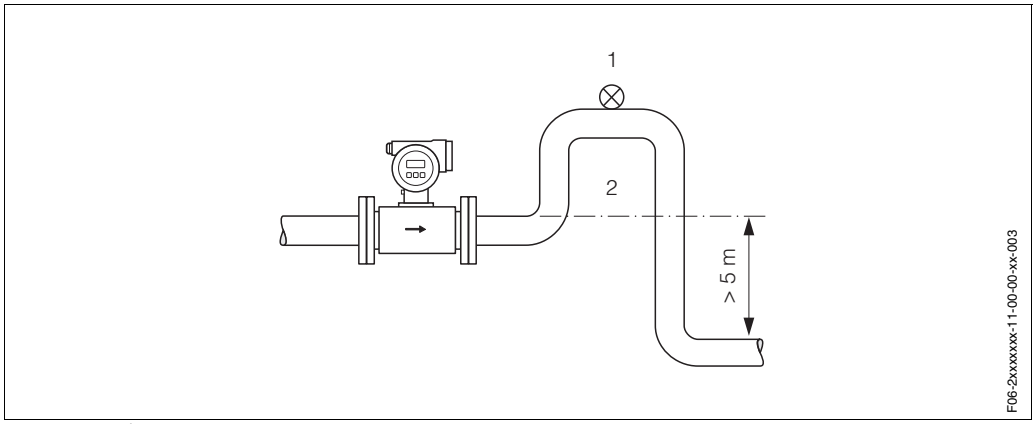

1 vent valve
2 siphon

Orientation
An optimum orientation position helps avoid gas and air accumulations and deposits in the measuring tube. Promag, nevertheless, supplies a range of functions and accessories for correct measuring of problematic fluids:
Empty Pipe Detection (EPD) ensures the detection of partially filled measuring tubes, e.g. in the case of degassing fluids or varying process pressures

Vertical orientation:
This orientation is ideal for self-emptying piping systems and for use in conjunction with Empty Pipe Detection.

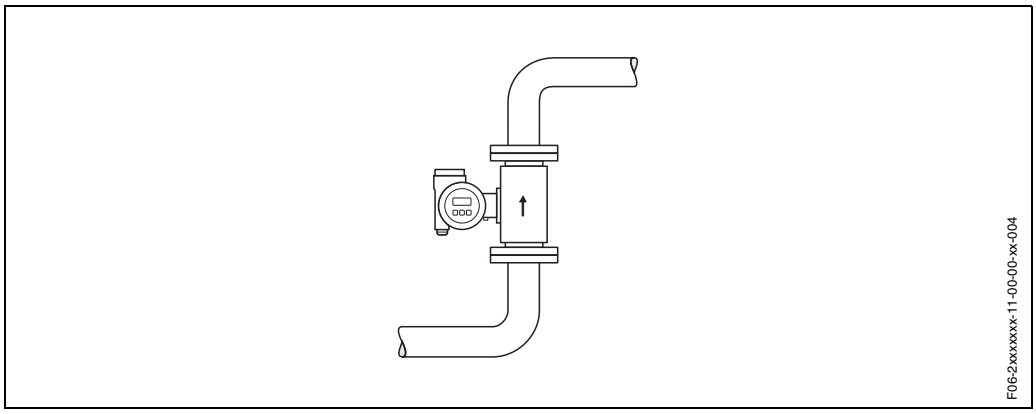

Horizontal orientation:
The measuring electrodes should be on a horizontal plane. This prevents brief insulation of the two electrodes by entrained air bubbles.

Achtung!
Empty Pipe Detection functions correctly only when the measuring device is installed horizontally and the transmitter housing is facing upward. Otherwise there is no guarantee that Empty Pipe Detection will respond if the measuring tube is only partially filled or empty.

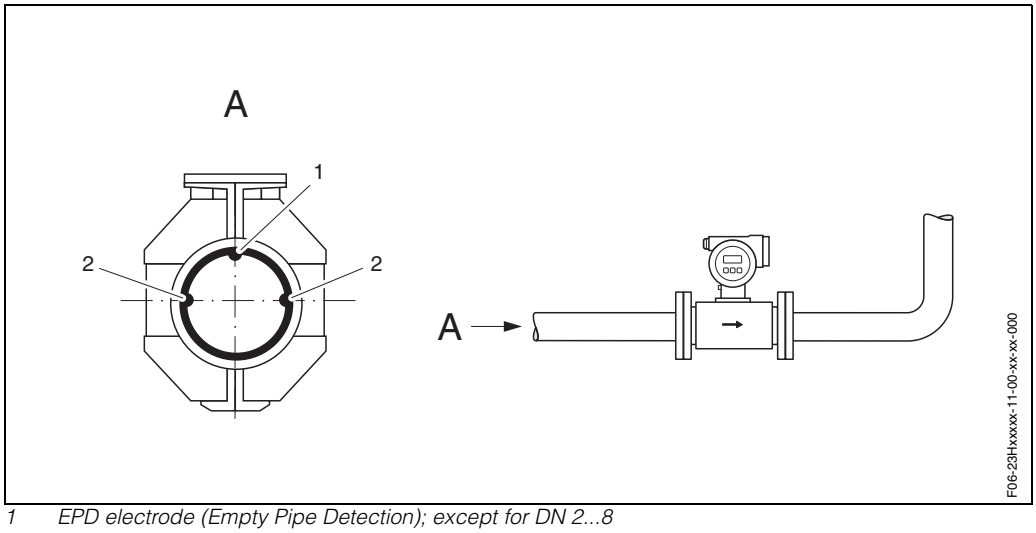

1 EPD electrode (Empty Pipe Detection); except for DN 2...8
2 Measurement electrodes (signal acquisition)

Vibrations
Secure the piping and the sensor if vibration is severe. Information on resistance to vibration and shock can be found on Page 13.

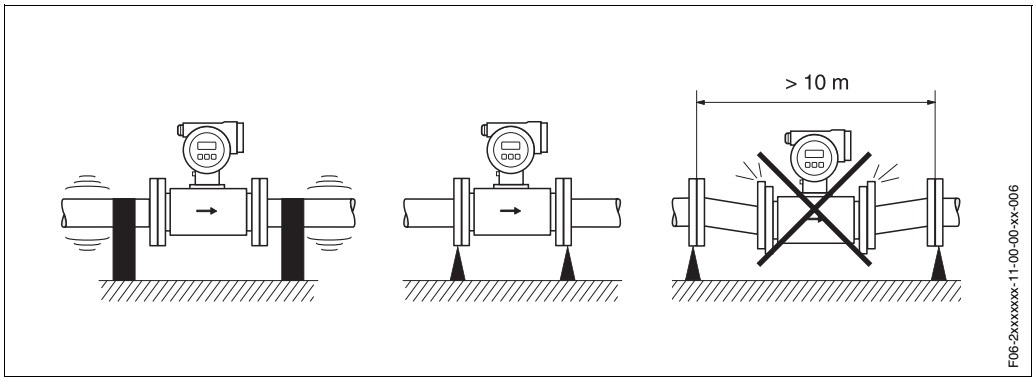

Inlet and outlet runs

If possible, install the sensor well clear of fittings such as valves, T-pieces, elbows, etc. Compliance with the following requirements for the inlet and outlet runs is necessary in order to ensure measuring accuracy:
- Inlet run: ≥ 5 x DN
- Outlet run: ≥ 2 x DN

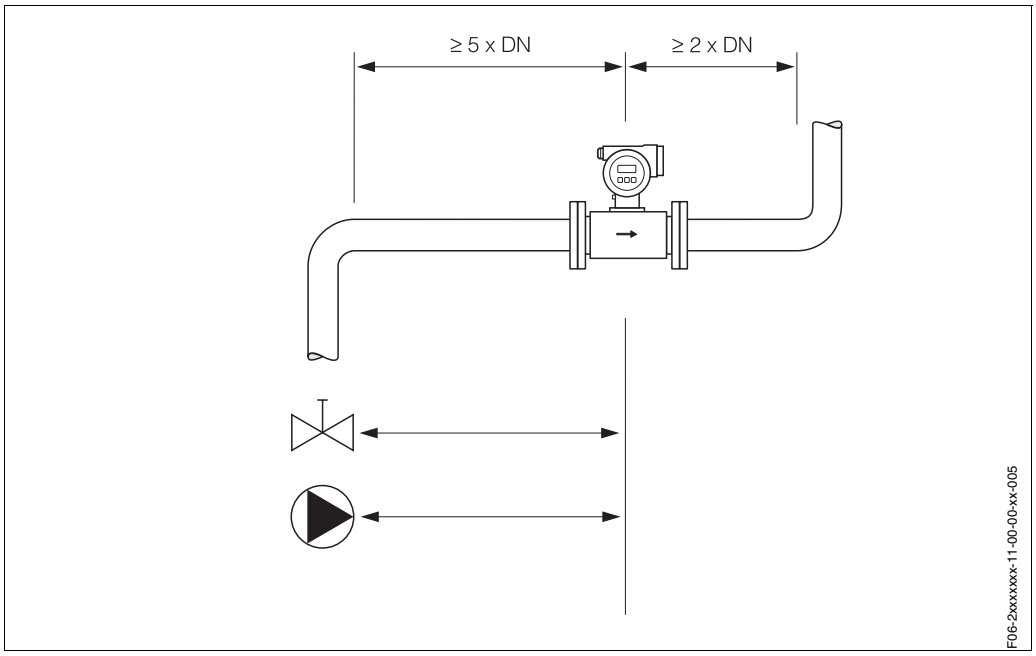

Adapters

Suitable adapters to (E) DIN EN 545 (double-flange junction sections) can be used to install the sensor in larger-diameter pipes. The resultant increase in the rate of flow improves measuring accuracy with very slow-moving fluids.
The nomogram shown here can be used to calculate the pressure loss caused by reducers and expanders. The nomogram applies only to fluids of viscosity similar to water:

1. Calculate the ratio of the diameters d/D.
2. From the nomogram read off the pressure loss as a function of flow velocity (downstream from the reduction) and the d/D ratio.

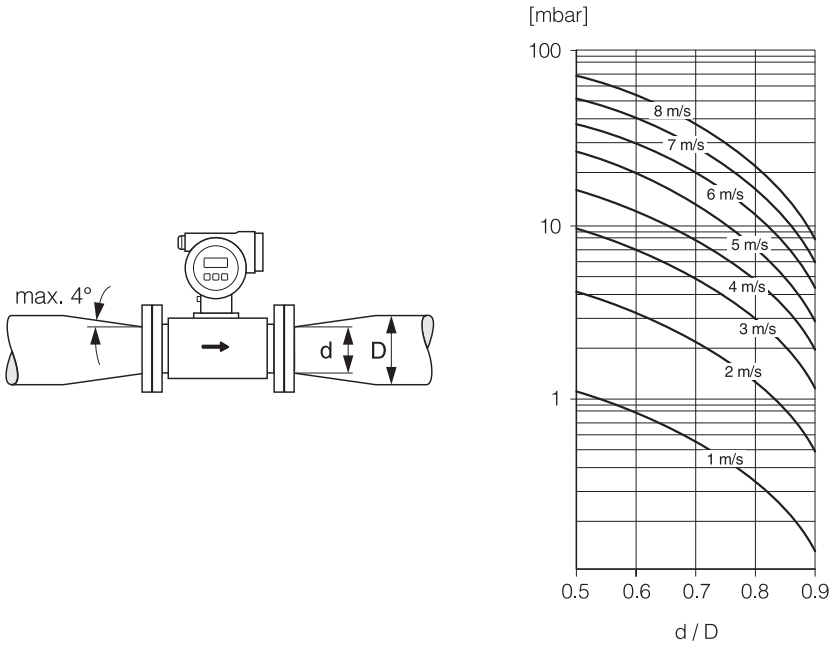

Pressure loss

- No pressure loss with nominal diameters DN 08 and larger if the sensor is installed in a pipe of the same nominal diameter.
- Pressure losses for configurations incorporating adapters according to (E) DIN EN 545 (see “Adapters” on Page 12)

Ambient conditions

Ambient temperature	–20...+60 °C Install the device at a shady location. Avoid direct sunlight, particularly in warm climatic regions.
Storage temperature	–10...+50 °C (preferably +20 °C)
Degree of protection	IP 67 (NEMA 4X)
Shock and vibration resistance	Acceleration up to 2 g by analogy with IEC 68-2-6
CIP cleaning	Possible
SIP cleaning	Possible
Electromagnetic compatibility (EMC)	To EN 61326 and NAMUR recommendation NE 21

Process conditions

Medium temperature range

The permissible medium temperature depends on the sensor and the sealing material:

Sensor:
- –20...+150° C (+180 °C in preparation) for DN 2...25
- –20...+150° C for DN 40...100

Seal:
- EPDM: –20...+130° C
- Silicone: –20...+150° C
- Viton: –20...+150° C
- Kalrez: –20...+150° C

Conductivity

Minimum conductivity ≥ 50 µS/cm (for fluids in general)

Medium pressure range (nominal pressure)

The permissible nominal pressure depends on the process connection and seal:
- 40 bar: flange, weld nipple (with O-ring seal)
- 16 bar: all other process connections

Pressure tightness (liner)

Nominal diameter		**Measuring tube lining**	**Resistance to partial vacuum of measuring tube lining** Limit values for abs. pressure [mbar] at various fluid temperatures					
[mm]	[inch]		25 °C	80 °C	100 °C	130 °C	150 °C	180 °C
2…100	1/12…4"	PFA	0	0	0	0	0	0

Limiting flow

The diameter of the pipe and the flow rate determine the nominal diameter of the sensor. The optimum velocity of flow is 2...3 m/s. The velocity of flow (v), moreover, has to be matched to the physical properties of the medium:

- v > 2 m/s: for media forming coatings, e.g. in full-fat milk, etc.

Flow characteristics of Promag H (SI units)

Nominal diameter		Recommended flow rate	Factory settings		
[mm]	[inch]	Min./max. full scale value (v ~ 0.3 or 10 m/s)	Full scale value (v ~ 2.5 m/s)	Pulse weighting (~ 2 pulse/s)	Creepage (v ~ 0.04 m/s)
2	1/12"	0.06…1.8 dm^3/min	0.5 dm^3/min	0.005 dm^3	0.01 dm^3/min
4	5/32"	0.25…7 dm^3/min	2 dm^3/min	0.025 dm^3	0.05 dm^3/min
8	5/16"	1…30 dm^3/min	8 dm^3/min	0.10 dm^3	0.1 dm^3/min
15	1/2"	4…100 dm^3/min	25 dm^3/min	0.20 dm^3	0.5 dm^3/min
25	1"	9…300 dm^3/min	75 dm^3/min	0.50 dm^3	1 dm^3/min
40	1 1/2"	25…700 dm^3/min	200 dm^3/min	1.50 dm^3	3 dm^3/min
50	2"	35…1100 dm^3/min	300 dm^3/min	2.50 dm^3	5 dm^3/min
65	2 1/2"	60…2000 dm^3/min	500 dm^3/min	5.00 dm^3	8 dm^3/min
80	3"	90…3000 dm^3/min	750 dm^3/min	5.00 dm^3	12 dm^3/min
100	4"	145…4700 dm^3/min	1200 dm^3/min	10.00 dm^3	20 dm^3/min

Flow characteristics of Promag H (US units)

Nominal diameter		Recommended flow rate	Factory settings		
[inch]	[mm]	Min./max. full scale value (v ~ 0.3 or 10 m/s)	Full scale value (v ~ 2.5 m/s)	Pulse weighting (~ 2 pulse/s)	Creepage (v ~ 0.04 m/s)
1/12"	2	0.015…0.5 gal/min	0.1 gal/min	0.001 gal	0.002 gal/min
5/32"	4	0.07…2 gal/min	0.5 gal/min	0.005 gal	0.008 gal/min
5/16"	8	0.25…8 gal/min	2 gal/min	0.02 gal	0.025 gal/min
1/2"	15	1.0…27 gal/min	6 gal/min	0.05 gal	0.10 gal/min
1"	25	2.5…80 gal/min	18 gal/min	0.20 gal	0.25 gal/min
1 1/2"	40	7…190 gal/min	50 gal/min	0.50 gal	0.75 gal/min
2"	50	10…300 gal/min	75 gal/min	0.50 gal	1.25 gal/min
2 1/2"	65	16…500 gal/min	130 gal/min	1 gal	2.0 gal/min
3"	80	24…800 gal/min	200 gal/min	2 gal	2.5 gal/min
4"	100	40…1250 gal/min	300 gal/min	2 gal	4.0 gal/min

Mechanical construction

Design / dimensions

Promag H / DN 2...25

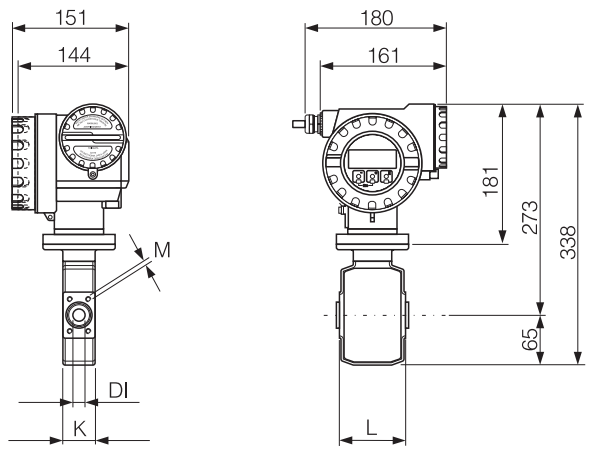

DN		PN **	DI	L	K	M
DIN [mm]	ANSI [inch]	DIN [bar]	[mm]	[mm]	[mm]	[mm]
2	–	16/40	2.25	86	43	M 6x4
4	–	16/40	4.5	86	43	M 6x4
8	–	16/40	9.0	86	43	M 6x4
15	–	16/40	16.0	86	43	M 6x4
–	1"	16/40	22.6	86	53	M 6x4
25	–	16/40	26.0	86	53	M 6x4

Fitting length depends on process connections → Page 17 ff.

** The permissible nominal pressure depends on the process connection and seal:
– 40 bar: flange, welding adapter (with O-ring seal)
– 16 bar: all other process connections

Wall-mounting kit (for DN 2...25)

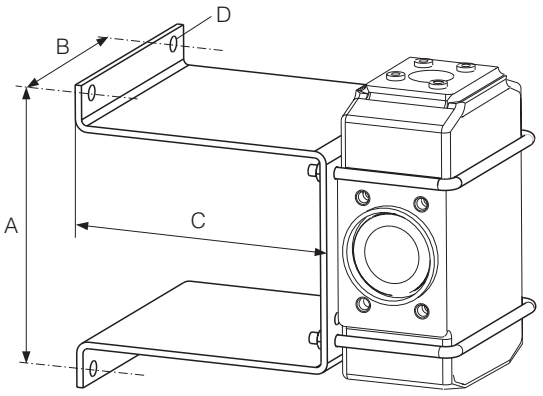

A = 125 mm, B = 88 mm, C = 120 mm, D = Ø 7 mm

Promag H / DN 40...100

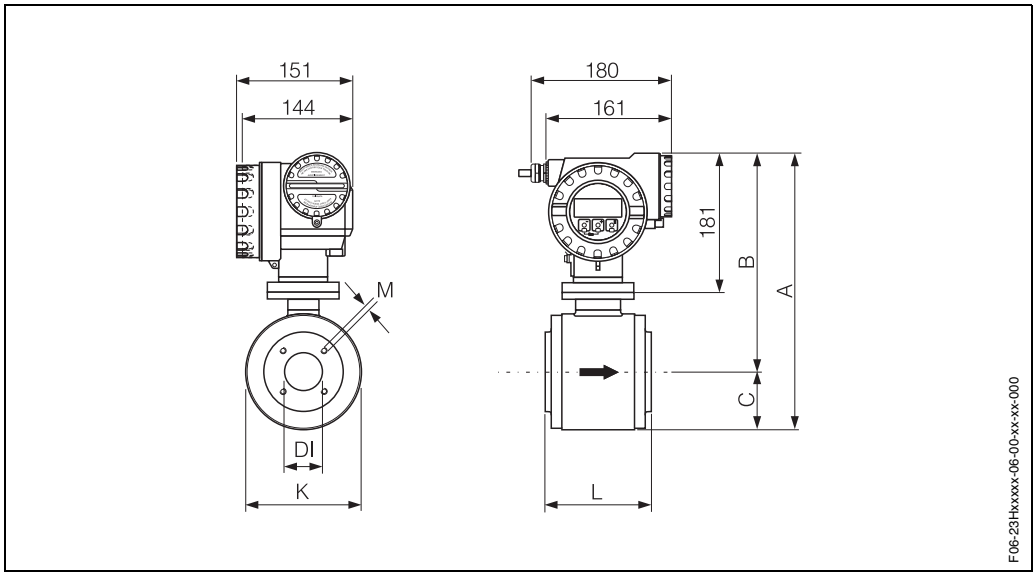

DN		PN	DI	L	A	B	C	K	M
DIN [mm]	ANSI [inch]	DIN [bar]	[mm]	[mm]	[mm]	[mm]	[mm]	[mm]	[mm]
40	1 1/2"	16	35.3	140	340	276	64	128	M 6x4
50	2"	16	48.1	140	365	288	77	153	M 8x4
65	2 1/2"	16	59.9	140	365	288	77	153	M 8x4
80	3"	16	72.6	200	415	313	102	203	M 12x4
100	4"	16	97.5	200	415	313	102	203	M 12x4
Fitting length depends on process connections → Page 24 ff.									

Front view of Promag H / DN 2...25 (without process connection)

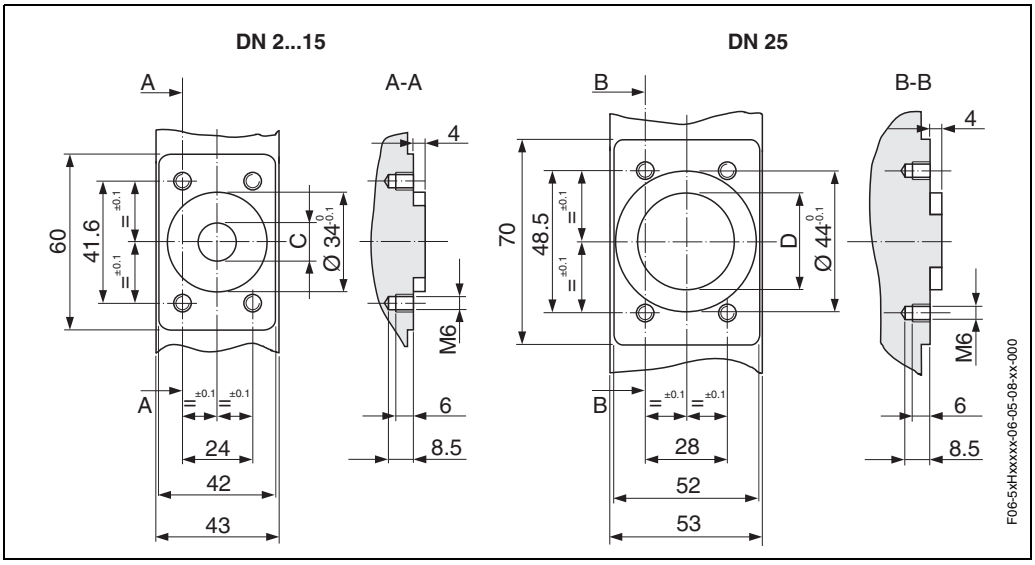

DN	C [mm]	D (DIN) [mm]	D (ANSI) [mm]
2...8	9	–	–
15	16	–	–
25	–	26	22.6

Process connections with O-ring seals (DN 2…25)

Weld nipple for pipe ISO 2463 1.4404 / 316L 5*H**-B**********	**Sensor** DN [mm]	**Piping** Pipe	**di** [mm]	**G** [mm]	**L** [mm]	**H x W** [mm]
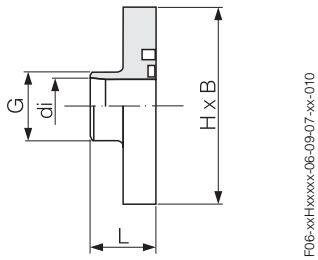	2…8	13.5 x 1.6	10.3	13.5	20.3	60 x 42
	15	21.3 x 1.6	18.1	21.3	20.3	60 x 42
	25 (DIN)	33.7 x 2	29.7	33.7	20.3	70 x 52
	Fitting length = (2 x L) + 86 mm					

Weld nipple for pipe IPS 1.4404 / 316L 5*H**-C**********	**Sensor** DN [mm]	**Piping** Pipe (ODT / SMS)	**di** [mm]	**G** [mm]	**L** [mm]	**H x W** [mm]
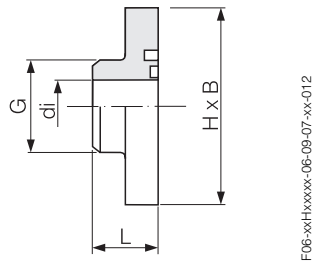	2…8	13.5 x 2.3	9.0	13.5	20.3	60 x 42
	15	21.3 x 2.65	16.0	21.3	20.3	60 x 42
	1" (25 ANSI)	33.7 x 3.25	27.2	33.7	22.3	70 x 52
	Fitting length = (2 x L) + 86 mm					

Flange PN 40 / DIN 2635 **1.4404 / 316L** 5*H**-D**********	**Sensor** DN [mm]	**Piping** Flange	**di** [mm]	**G** [mm]	**L** [mm]	**LK** [mm]	**M** [mm]	**H x W** [mm]
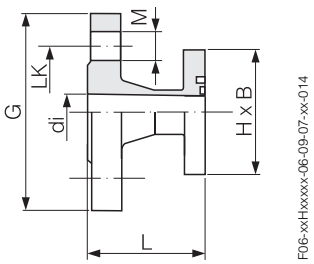	2…8	DN 15	17.3	95	56.2	65	14	60 x 42
	15	DN 15	17.3	95	56.2	65	14	60 x 42
	25 (DIN)	DN 25	28.5	115	56.2	85	14	70 x 52
	Fitting length = (2 x L) + 86 mm Fitting length to DVGW (200 mm)							

Flange Cl 150 / ANSI 16.5 **1.4404 / 316L** 5*H**-E**********	**Sensor** DN [mm]	**Piping** Flange [inch]	**di** [mm]	**G** [mm]	**L** [mm]	**LK** [mm]	**M** [mm]	**H x W** [mm]
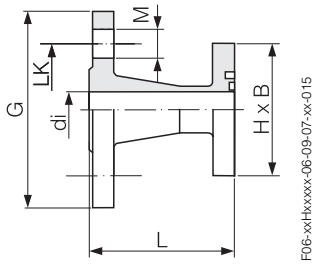	2…8	1/2"	15.7	89	66.0	60.5	15.7	60 x 42
	15	1/2"	16.0	89	66.0	60.5	15.7	60 x 42
	1" (25 ANSI)	1"	26.7	108	71.8	79.2	15.7	70 x 52
	Fitting length = (2 x L) + 86 mm							

Flange 20K / JIS B2238 **1.4404 / 316L** 5*H**-F**********	**Sensor** DN [mm]	**Piping** Flange	**di** [mm]	**G** [mm]	**L** [mm]	**LK** [mm]	**M** [mm]	**H x W** [mm]
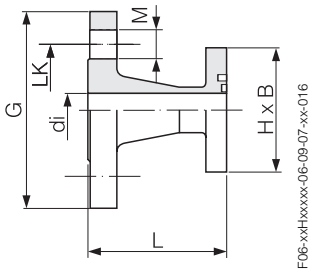	2…8	ND 10	10	90	67	65	15	60 x 42
	15	ND 15	16	95	67	70	15	60 x 42
	25 (DIN)	ND 25	26	125	67	95	19	70 x 52
	Fitting length = (2 x L) + 86 mm							

Flange PN 16 / DIN 2501 **PVDF** 5*H**-G**********	**Sensor** DN [mm]	**Piping** Flange	**di** [mm]	**G** [mm]	**L** [mm]	**M** [mm]	**LK** [mm]	**H x W** [mm]
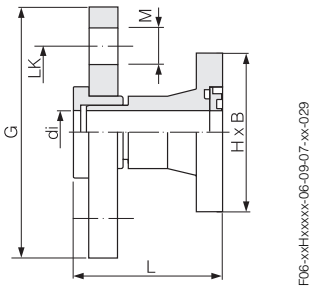	2…8	DN 15	15.7	95	57	14	65	60 x 42
	15	DN 15	15.7	95	57	14	65	60 x 42
	25 (DIN)	DN 25	27.3	115	57	14	85	70 x 52
	– Fitting length = (2 x L) + 86 mm – Fitting length to DVGW (200 mm) – The requisite ground rings can be ordered as accessories (Order code: DK5HR-****)							

Flange Cl 150 / ANSI 16.5 PVDF 5*H**-H**********	**Sensor** DN [mm]	**Piping** Flange [inch]	**di** [mm]	**G** [mm]	**L** [mm]	**M** [mm]	**LK** [mm]	**H x W** [mm]
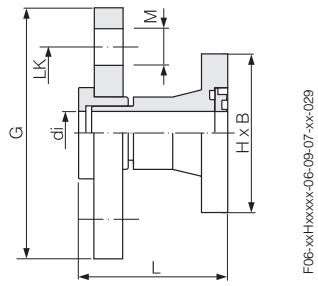	2…8	1/2"	15.7	95	57	16	60	60 x 42
	15	1/2"	15.7	95	57	16	60	60 x 42
	1" (25 ANSI)	1"	27.3	115	57	16	79	70 x 52
	– Fitting length = (2 x L) + 86 mm – The requisite ground rings can be ordered as accessories (Order code: DK5HR-****)							

Flange 10K / JIS B2238 PVDF 5*H**-J**********	**Sensor** DN [mm]	**Piping** Flange	**di** [mm]	**G** [mm]	**L** [mm]	**M** [mm]	**LK** [mm]	**H x W** [mm]
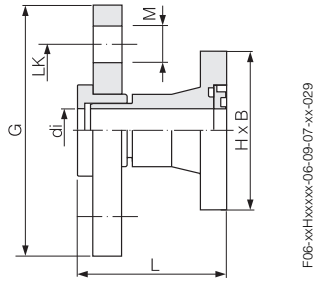	2…8	ND 15	15.7	95	57	15	70	60 x 42
	15	ND 15	15.7	95	57	15	70	60 x 42
	25 (DIN)	ND 25	27.3	125	57	19	90	70 x 52
	– Fitting length = (2 x L) + 86 mm – The requisite ground rings can be ordered as accessories (Order code: DK5HR-****)							

External pipe thread ISO 228 / DIN 2999, 1.4404 / 316L 5*H**-K**********	**Sensor** DN [mm]	**Piping** Internal thread [inch]	**di** [mm]	**G** [inch]	**L** [mm]	**S** [mm]	**H x W** [mm]
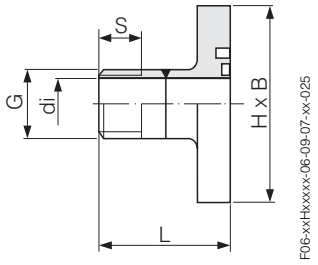	2…8	R 3/8"	10	3/8"	40	10.1	60 x 42
	15	R 1/2"	16	1/2"	40	13.2	60 x 42
	1" (25 ANSI)	R 1"	25	1"	40	16.5	70 x 52
	Fitting length = (2 x L) + 86 mm						

Internal pipe thread ISO 228 / DIN 2999, 1.4404 / 316L 5*H**-L**********	**Sensor** DN [mm]	**Piping** External thread [inch]	**di** [mm]	**G** [inch]	**D** [mm]	**L** [mm]	**S** [mm]	**H x W** [mm]
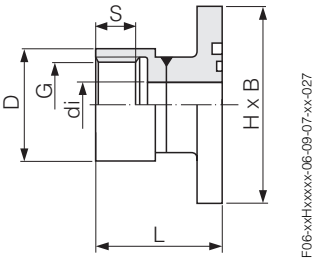	2…8	Rp 3/8"	8.9	3/8"	22	45	13	60 x 42
	15	Rp 1/2"	16.0	1/2"	27	45	14	60 x 42
	1" (25 ANSI)	Rp 1"	27.2	1"	40	49	17	70 x 52
	Fitting length = (2 x L) + 86 mm							

Hose connection **1.4404 / 316L** 5*H**-M/N/P**********	**Sensor** DN [mm]	**Hose (LW)** Inside diameter [mm]	**di** [mm]	**LW** [mm]	**L** [mm]	**H x W** [mm]
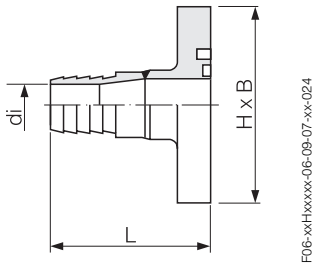	2…8	13	10.0	13	49	60 x 42
	15	16	12.6	16	49	60 x 42
	15	19	16.0	19	49	70 x 52
	– Fitting length = (2 x L) + 86 mm					

Adhesive fitting **PVC** 5*H**-R/S**********	**Sensor** DN [mm]	**Piping** Adhesive connection [inch]	**di** [mm]	**G** [mm]	**L** [mm]	**H x W** [mm]
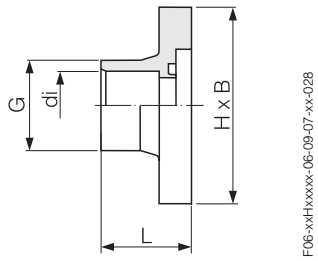	2…8	1/2"	21.5	27.3	28.0	60 x 42
	15	20 x 2	20.2	27.0	38.5	60 x 42
	– Fitting length = (2 x L) + 86 mm – The requisite ground rings can be ordered as accessories (Order code: DK5HR-****)					

Process connections with aseptic gasket seals (DN 2...25)

Weld nipple for pipe DIN 11850 **1.4404 / 316L** 5*H**-U**********	**Sensor** DN [mm]	**Piping** Pipe	**di** [mm]	**G** [mm]	**L** [mm]	**H x W** [mm]
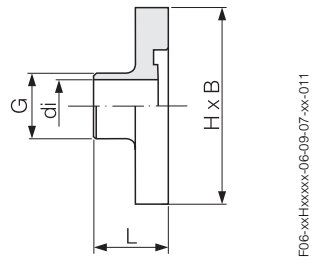	2…8	14 x 2	10	14	23.3	60 x 42
	15	20 x 2	16	20	23.3	60 x 42
	25 (DIN)	30 x 2	26	30	23.3	70 x 52
	– Fitting length = (2 x L) + 86 mm – If pigs are used for cleaning, it is essential to take the inside diameters of measuring tube (Page 15) and process connection (di) into account.					

Weld nipple for ODT/SMS **1.4404 / 316L** 5*H**-V**********	**Sensor** DN [mm]	**Piping** Pipe	**di** [mm]	**G** [mm]	**L** [mm]	**H x W** [mm]
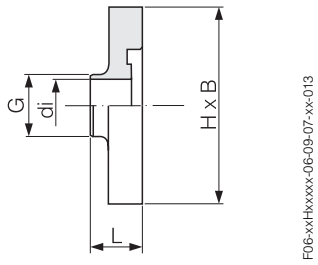	2…8	12.7 x 1.65	9.4	12.7	16.1	60 x 42
	15	19.1 x 1.65	15.8	19.1	16.1	60 x 42
	1" (25 ANSI)	24.5 x 1.65	22.1	25.4	16.1	70 x 52
	– Fitting length = (2 x L) + 86 mm – If pigs are used for cleaning, it is essential to take the inside diameters of measuring tube (Page 15) and process connection (di) into account.					

Clamp ISO 2852 **1.4404 / 316L** 5*H**-W**********	**Sensor** DN [inch]	**Piping** Clamp	**di** [mm]	**G** [mm]	**L** [mm]	**H x W** [mm]
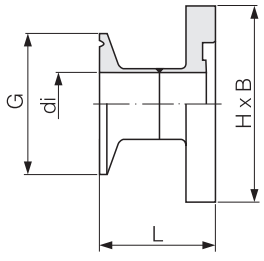	1" (25 ANSI)	Pipe 25.4 x 1.65 (ISO; 1")	22.6	50.5	44.5	70 x 52
	– Fitting length = (2 x L) + 86 mm – If pigs are used for cleaning, it is essential to take the inside diameters of measuring tube (Page 15) and process connection (di) into account.					

Clamp DIN 32676 **1.4404 / 316L** 5*H**-0**********	**Sensor** DN [mm]	**Piping** Clamp	**di** [mm]	**G** [mm]	**L** [mm]	**H x W** [mm]
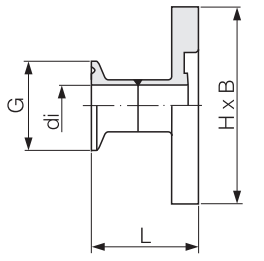	2…8	Pipe 14 x 2 (DIN 11850; DN 10)	10	34.0	41.0	60 x 42
	15	Pipe 20 x 2 (DIN 11850; DN 15)	16	34.0	41.0	60 x 42
	25 (DIN)	Pipe 30 x 2 (DIN 11850; DN 25)	26	50.5	44.5	70 x 52
	– Fitting length = (2 x L) + 86 mm – If pigs are used for cleaning, it is essential to take the inside diameters of measuring tube (Page 15) and process connection (di) into account.					

Tri-Clamp **1.4404 / 316L** 5*H**-1**********	**Sensor** DN [mm]	**Piping** Tri-Clamp	**di** [mm]	**G** [mm]	**L** [mm]	**H x W** [mm]
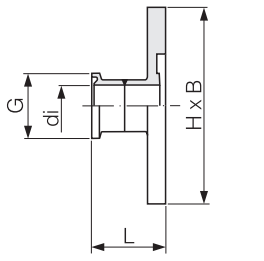	2…8	Pipe 12.7 x 1.65 (ODT 1/2")	9.4	25.0	28.5	60 x 42
	15	Pipe 19.1 x 1.65 (ODT 3/4")	15.8	25.0	28.5	60 x 42
	1" (25 ANSI)	Pipe 24.5 x 1.65 (ODT 1")	22.1	50.4	28.5	70 x 52
	– Fitting length = (2 x L) + 86 mm – If pigs are used for cleaning, it is essential to take the inside diameters of measuring tube (Page 15) and process connection (di) into account.					

Coupling DIN 11851 **1.4404 / 316L** 5*H**-2**********	**Sensor** DN [mm]	**Piping** Screw union	**di** [mm]	**G** [mm]	**L** [mm]	**H x W** [mm]
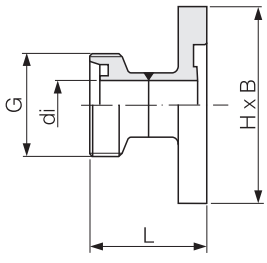	2…8	Pipe 12 x 1 (DN 10)	10	Rd 28 x 1/8"	44	60 x 42
	15	Pipe 18 x 1 or 1.5 (DN 15)	16	Rd 34 x 1/8"	44	60 x 42
	25 (DIN)	Pipe 28 x 1 or 1.5 (DN 25)	26	Rd 52 x 1/6"	52	70 x 52
	– Fitting length = (2 x L) + 86 mm – If pigs are used for cleaning, it is essential to take the inside diameters of measuring tube (Page 15) and process connection (di) into account.					

Coupling DIN 11864-1 **1.4404 / 316L** 5*H**-3**********	**Sensor** DN [mm]	**Piping** Screw union	**di** [mm]	**G** [mm]	**L** [mm]	**H x W** [mm]
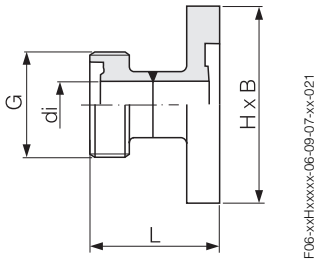	2…8	Pipe 13 x 1.5 (DIN 11850; DN 10)	10	Rd 28 x 1/8"	42	60 x 42
	15	Pipe 19 x 1.5 (DIN 11850; DN 15)	16	Rd 34 x 1/8"	42	60 x 42
	25 (DIN)	Pipe 29 x 1.5 (DIN 11850; DN 25)	26	Rd 52 x 1/6"	49	70 x 52
	– Fitting length = (2 x L) + 86 mm – If pigs are used for cleaning, it is essential to take the inside diameters of measuring tube (Page 15) and process connection (di) into account.					

Flange DIN 11864-2 Form A **1.4404 / 316L** 5*H**-4**********	**Sensor** DN [mm]	**Piping** Flange	**di** [mm]	**G** [mm]	**L** [mm]	**LK** [mm]	**M** [mm]	**H x W** [mm]
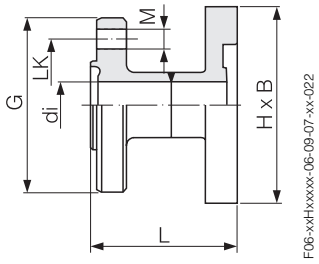	2…8	Pipe 13 x 1.5 (DIN 11850; DN 10)	10	54	48.5	37	9	60 x 42
	15	Pipe 19 x 1.5 (DIN 11850; DN 15)	16	59	48.5	42	9	60 x 42
	25 (DIN)	Pipe 29 x 1.5 (DIN 11850; DN 25)	26	70	48.5	53	9	70 x 52
	– Fitting length = (2 x L) + 86 mm – If pigs are used for cleaning, it is essential to take the inside diameters of measuring tube (Page 15) and process connection (di) into account.							

Coupling SMS 1145 **1.4404 / 316L** 5*H**-5**********	**Sensor** DN [mm]	**Piping** Screw union [inch]	**di** [mm]	**G** [mm]	**L** [mm]	**H x W** [mm]
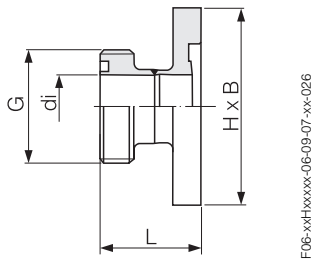	1" (25 ANSI)	1"	22.1	Rd 40 x 1/6"	30.8	70 x 52
	– Fitting length = (2 x L) + 86 mm – If pigs are used for cleaning, it is essential to take the inside diameters of measuring tube (Page 15) and process connection (di) into account.					

Process connections orderable only as accessories (with O-ring seal, DN 2...25)

External pipe thread NPT **1.4404 / 316L** DKH**-GD**	**Sensor** DN [mm]	**Piping** Internal thread [inch]	**di** [mm]	**G** [inch]	**L** [mm]	**S** [mm]	**H x W** [mm]
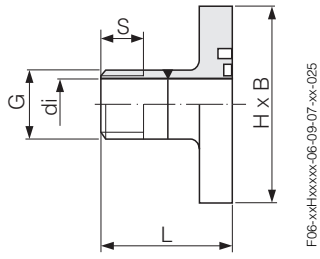	2…8	NPT 3/8"	10	3/8"	50	15.5	60 x 42
	15	NPT 1/2"	16	1/2"	50	20.0	60 x 42
	1" (25 ANSI)	NPT 1"	25	1"	55	25.0	70 x 52
	Fitting length = (2 x L) + 86 mm						

Internal pipe thread NPT **1.4404 / 316L** DKH**-GC**	**Sensor** DN [mm]	**Piping** External thread [inch]	**di** [mm]	**G** [inch]	**D** [mm]	**L** [mm]	**S** [mm]	**H x W** [mm]
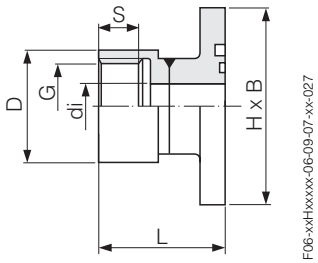	2…8	NPT 3/8"	8.9	3/8"	22	45	13	60 x 42
	15	NPT 1/2"	16.0	1/2"	27	45	14	60 x 42
	1" (25 ANSI)	NPT 1"	27.2	1"	40	49	17	70 x 52
	Fitting length = (2 x L) + 86 mm							

Process connections orderable only as accessories (with asceptic gasket seal)

Tri-Clamp **1.4404 / 316L** DKH**-HF***	**Sensor** DN [mm]	**Piping** Tri-Clamp	**di** [mm]	**G** [mm]	**L** [mm]	**H x W** [mm]
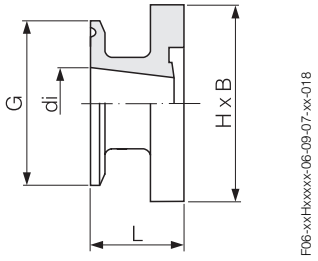	15	Pipe 25.4 x 1.65 (ODT; 1")	22.1	50.4	28.5	60 x 42
	– Fitting length = (2 x L) + 86 mm – If pigs are used for cleaning, it is essential to take the inside diameters of measuring tube (Page 15) and process connection (di) into account.					

Ground rings available as accessories (PVDF flange / PVC adhesive coupling)

Ground ring **1.4435 / 316L, Alloy C-22** **Titanium (Pt/Rh-coated)** DK5HR-****	**Sensor** DN [mm]	**di** [mm]	**B** [mm]	**C** [mm]	**D** [mm]
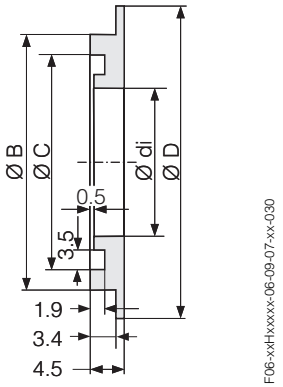	2…8	9.0	22.0	17.6	33.9
	15	16.0	29.0	24.6	33.9
	25 (DIN)	22.6	36.5	31.2	43.9
	1" (25 ANSI)	26.0	39.0	34.6	43.9

Front view of Promag H / DN 40...100 (without process connection)

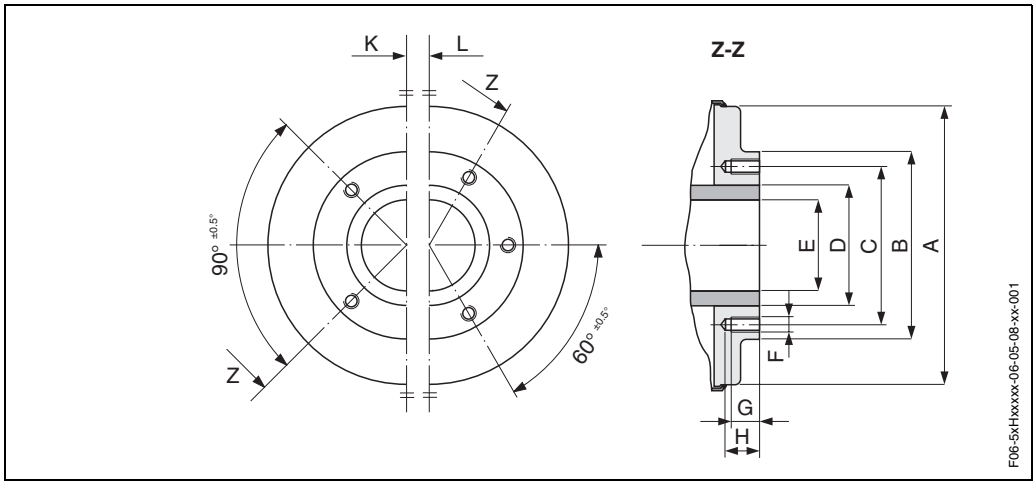

DN [mm]	A [mm]	B [mm]	C [mm]	D [mm]	E [mm]	F [mm]	G [mm]	N [mm]	L [mm]	K [mm]
40	122.0	86	71.0	51.0	35.3	M 8	15	18	–	4
50	147.0	99	83.5	63.5	48.1	M 8	15	18	–	4
65	147.0	115	100.0	76.1	59.9	M 8	15	18	6	–
80	197.0	141	121.0	88.9	72.6	M 12	15	20	–	4
100	197.0	162	141.5	114.3	97.5	M 12	15	20	6	–

Process connections with aseptic gasket seals (DN 40...100)

Weld nipple for pipe DIN 11850 **1.4404 / 316L** 5*H**-U**********	**DN** [mm]	**di** [mm]	**G** [mm]	**D** [mm]	**L** [mm]	**L1** [mm]	**LK** [mm]
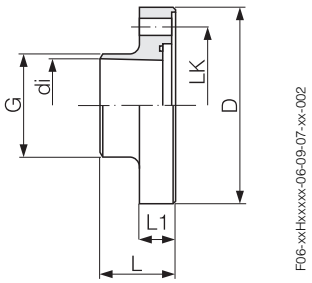	40	38.0	43	92	42	19	71.0
	50	50.0	55	105	42	19	83.5
	65	66.0	72	121	42	21	100.0
	80	81.0	87	147	42	24	121.0
	100	100.0	106	168	42	24	141.5
	– Fitting length = (2 x L) + 140 mm (DN 40...65) / + 200 mm (DN 80...100) – If pigs are used for cleaning, it is essential to take the inside diameters of measuring tube (Page 15) and process connection (di) into account.						

Weld nipple for pipe ODT **1.4404 / 316L** 5*H**-V**********	**DN** [mm]	**di** [mm]	**G** [mm]	**D** [mm]	**L** [mm]	**L1** [mm]	**LK** [mm]
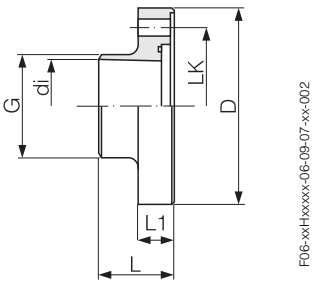	40	35.3	40	92	42	19	71.0
	50	48.1	55	105	42	19	83.5
	65	59.9	66	121	42	21	100.0
	80	72.6	79	147	42	24	121.0
	100	97.5	104	168	42	24	141.5
	– Fitting length = (2 x L) + 140 mm (DN 40...65) / + 200 mm (DN 80...100) – If pigs are used for cleaning, it is essential to take the inside diameters of measuring tube (Page 15) and process connection (di) into account.						

Clamp ISO 2852 **1.4404 / 316L** 5*H**-W**********	**DN** [mm]	**di** [mm]	**G** [mm]	**D** [mm]	**L** [mm]	**LK** [mm]
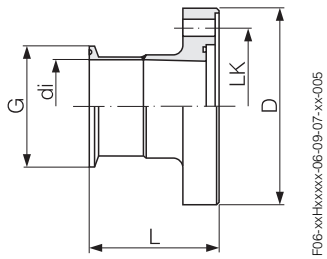	40	35.6	50.5	92	68.5	71.0
	50	48.6	64.0	105	68.5	83.5
	65	60.3	77.5	121	68.5	100.0
	80	72.9	91.0	147	68.5	121.0
	100	97.6	119.0	168	68.5	141.5
	– Fitting length = (2 x L) + 140 mm (DN 40...65) / + 200 mm (DN 80...100) – If pigs are used for cleaning, it is essential to take the inside diameters of measuring tube (Page 15) and process connection (di) into account.					

Clamp DIN 32676 **1.4404 / 316L** 5*H**-0**********	**DN** [mm]	**di** [mm]	**G** [mm]	**D** [mm]	**L** [mm]	**LK** [mm]
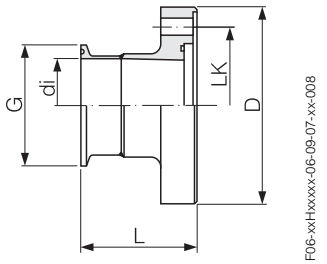	40	38	50.5	92	61.5	71.0
	50	50	64.0	105	61.5	83.5
	65	66	91.0	121	68.0	100.0
	80	81	106.0	147	68.0	121.0
	100	100	119.0	168	68.0	141.5
	– Fitting length = (2 x L) + 140 mm (DN 40...65) / + 200 mm (DN 80...100) – If pigs are used for cleaning, it is essential to take the inside diameters of measuring tube (Page 15) and process connection (di) into account.					

Tri-Clamp **1.4404 / 316L** 5*H**-1**********	**DN**		**di**	**G**	**D**	**L**	**LK**
	[mm]	[inch]	[mm]	[mm]	[mm]	[mm]	[mm]
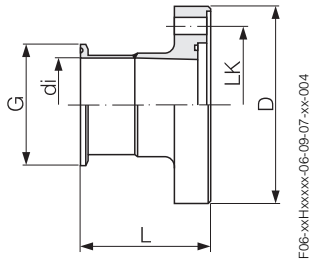	40	1 1/2"	34.8	50.4	92	68.6	71.0
	50	2"	47.5	63.9	105	68.6	83.5
	65	–	60.2	77.4	121	68.6	100.0
	80	3"	72.9	90.9	147	68.6	121.0
	100	4"	97.4	118.9	168	68.6	141.5
	– Fitting length = (2 x L) + 140 mm (DN 40...65) / + 200 mm (DN 80...100) – If pigs are used for cleaning, it is essential to take the inside diameters of measuring tube (Page 15) and process connection (di) into account.						

Coupling DIN 11851 **1.4404 / 316L** 5*H**-2**********	**DN** [mm]	**di** [mm]	**G** [mm]	**D** [mm]	**L** [mm]	**LK** [mm]
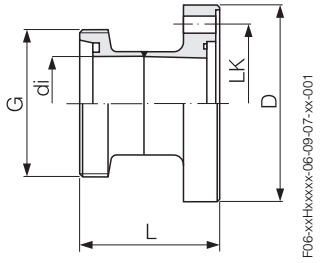	40	38	Rd 65 x 1/6"	92	72	71.0
	50	50	Rd 78 x 1/6"	105	74	83.5
	65	66	Rd 95 x 1/6"	121	78	100.0
	80	81	Rd 110 x 1/4"	147	83	121.0
	100	100	Rd 130 x 1/4"	168	92	141.5
	– Fitting length = (2 x L) + 140 mm (DN 40...65) / + 200 mm (DN 80...100) – If pigs are used for cleaning, it is essential to take the inside diameters of measuring tube (Page 15) and process connection (di) into account.					

Coupling DIN 11864-1 Form A **1.4404 / 316L** 5*H**-3**********	**DN** [mm]	**di** [mm]	**G** [mm]	**D** [mm]	**L** [mm]	**LK** [mm]
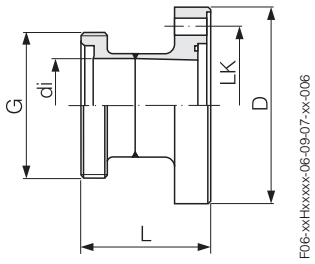	40	38	Rd 65 x 1/6"	92	71	71.0
	50	50	Rd 78 x 1/6"	105	71	83.5
	65	66	Rd 95 x 1/6"	121	76	100.0
	80	81	Rd 110 x 1/4"	147	82	121.0
	100	100	Rd 130 x 1/4"	168	90	141.5
	– Fitting length = (2 x L) + 140 mm (DN 40...65) / + 200 mm (DN 80...100) – If pigs are used for cleaning, it is essential to take the inside diameters of measuring tube (Page 15) and process connection (di) into account.					

Flange DIN 11864-2 Form A **1.4404 / 316L** 5*H**-4**********	**DN** [mm]	**di** [mm]	**G** [mm]	**D** [mm]	**L** [mm]	**LK1** [mm]	**LK2** [mm]
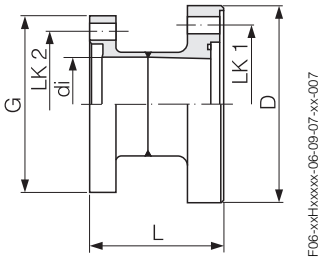	40	38	82	92	64	71.0	65
	50	50	94	105	64	83.5	77
	65	66	113	121	64	100.0	95
	80	81	133	147	98	121.0	112
	100	100	159	168	98	141.5	137
	– Fitting length = (2 x L) + 140 mm (DN 40...65) / + 200 mm (DN 80...100) – If pigs are used for cleaning, it is essential to take the inside diameters of measuring tube (Page 15) and process connection (di) into account.						

Coupling SMS 1145 **1.4404 / 316L** 5*H**-5**********	**DN** [mm]	**di** [mm]	**G** [mm]	**D** [mm]	**L** [mm]	**LK** [mm]
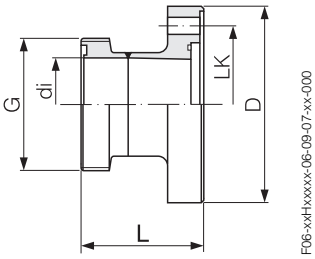	40	35.5	Rd 60 x 1/6"	92	63	71.0
	50	48.5	Rd 70 x 1/6"	105	65	83.5
	65	60.5	Rd 85 x 1/6"	121	70	100.0
	80	72.0	Rd 98 x 1/6"	147	75	121.0
	100	97.6	Rd 132 x 1/6"	168	70	141.5
	– Fitting length = (2 x L) + 140 mm (DN 40...65) / + 200 mm (DN 80...100) – If pigs are used for cleaning, it is essential to take the inside diameters of measuring tube (Page 15) and process connection (di) into account.					

Coupling ISO 2853 **1.4404 / 316L** 5*H**-6**********	**DN** [mm]	**di** [mm]	**G** [mm]	**D** [mm]	**L** [mm]	**LK** [mm]
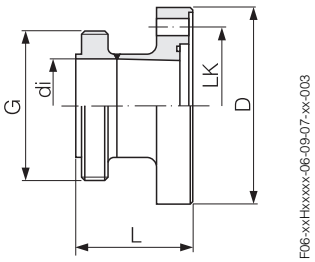	40	35.6	50.6	92	61.5	71.0
	50	48.6	64.1	105	61.5	83.5
	65	60.3	77.6	121	61.5	100.0
	80	72.9	91.1	147	61.5	121.0
	100	97.6	118.1	168	61.5	141.5
	– Fitting length = (2 x L) + 140 mm (DN 40...65) / + 200 mm (DN 80...100) – If pigs are used for cleaning, it is essential to take the inside diameters of measuring tube (Page 15) and process connection (di) into account.					

Weight

Weight data of Promag H in [kg]

Nominal diameter		Compact version
[mm]	[inch]	DIN
2	1/12"	5.2
4	5/32"	5.2
8	5/16"	5.3
15	1/2"	5.4
25	1"	5.5
40	1 1/2"	6.5
50	2"	9.0
65	2 1/2"	9.5
80	3"	19.0
100	4"	18.5

Transmitter Promag (compact version): 3.4 kg
(Weight data valid for standard pressure ratings and without packaging material)

Materials

Transmitter housing:
Compact housing: powder coated die-cast aluminium

Sensor housing:
Stainless steel 1.4301

Wall mounting (holder panel):
Stainless steel 1.4301

Measuring tube:
Stainless steel 1.4301 or 1.4306/304L

Flanges:
- All connections 1.4404/316L
- Flanges (DIN, ANSI, JIS) made of PVDF
- Adhesive fitting made of PVC

Ground rings:
- Standard: 1.4435/316L
- Option: tantalum, platinum (base material: titanium Grade 2, platinum coating min. 12 µm), Alloy C-22

Electrodes:
- Standard: 1.4435
- Option: Alloy C-22, tantalum, platinum/rhodium 80/20 (up to DN 25 only)

Seals:
- DN 2...25: O-ring (EPDM, Viton, Kalrez) or gasket seal (EPDM, silicone, Viton)
- DN 40...100: gasket seal (EPDM, silicone)

Material load curves

Weld nipple in 1.4404 / 316L (with O-ring)
to ISO 2463, IPS, ISO 228 / DIN 2999

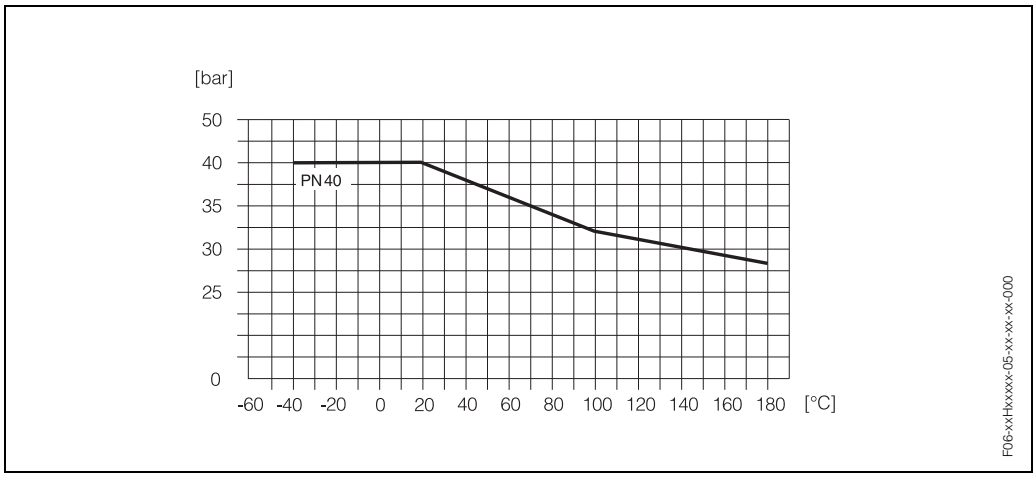

Weld nipple in 1.4404 / 316L (with gasket seal)
to DIN 11850, ODT, Clamp (ODT, ISO 2852, DIN 32676), coupling (DIN 11851, DIN 11864-1, ISO 2853, SMS 1145), flange DIN 11864-2

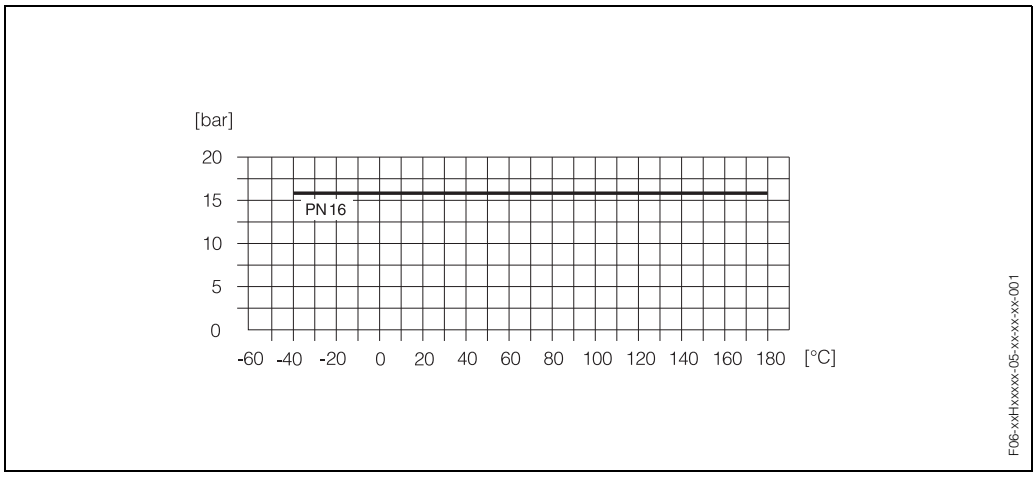

Flange material: 1.4404 / 316L, PVDF; Adhesive fitting: PVC-U
to DIN 2635 and 2501

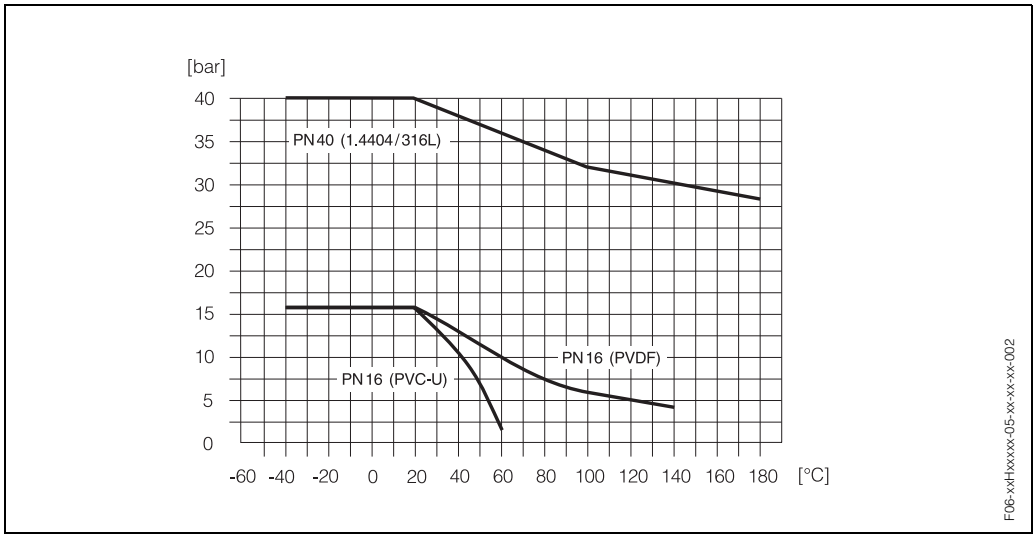

Flange material: 316L, PVDF
to ANSI B16.5

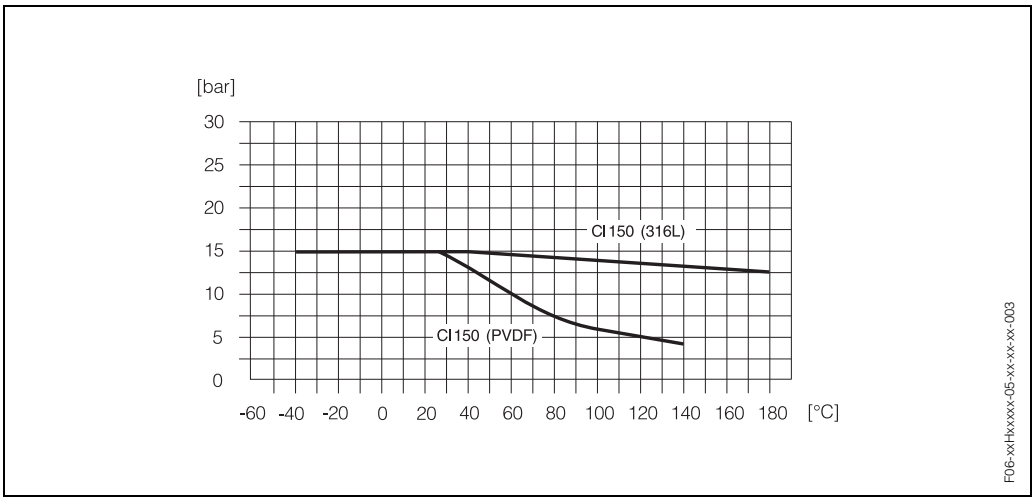

Flange material: 1.4404 / 316L, PVDF
to JIS B2238

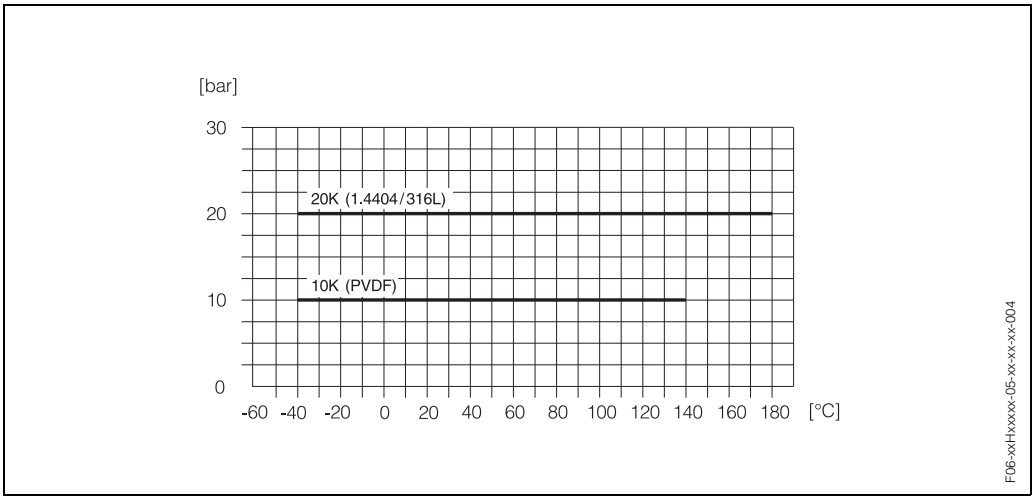

Fitted electrodes

Measuring electrodes and EPD electrodes
- Standard with: 1.4435, Alloy C-22, tantalum, platinum/rhodium
- DN 2...8: without EPD electrode

Process connection

- With O-ring: welding nipples (ISO 2463, IPS), flanges (DIN, ANSI, JIS), PVDF flanges (DIN, ANSI, JIS), external pipe thread, internal pipe thread, hose connection, PVC adhesive fittings
- With gasket seal: weld nipples (DIN 11850, ODT), clamps (ODT, ISO 2852, DIN 32676), threaded fasteners (DIN 11851, DIN 11864-1, ISO 2853, SMS 1145), flanges (DIN 11864-2)

Surface roughness

- PFA liner: ≤ 0.3 µm
- Electrodes:
  – 1.4435, Alloy C-22: ≤ 0.4 µm
  – Tantalum, platinum/rhodium: ≤ 0.8 µm
- Process connection Promag H: ≤ 0.8 µm

(all data relate to parts in contact with medium)

Human interface

Display elements	• Liquid-crystal display: four lines with 16 characters per line • Custom configurations for presenting different measured values and status variables • 2 totalizers
Operating elements	Unified (PROline-) operation concept: Local operation with three optical keys (–, +, E)
Remote operation	Operation via HART

Certificates and approvals

Ex approval	Information on the currently available Ex-rated versions (ATEX, FM, CSA, etc.) is available on request from your E+H sales outlet. All information relevant to explosion protection is available in separate Ex documents that you can order as necessary.
Sanitary compatibility	3A authorization and EHEDG-tested Seals in conformity with FDA (except Kalrez seals)
CE mark	The measuring system is in conformity with the statutory requirements of the EC Directives. Endress+Hauser confirms successful testing of the device by affixing to it the CE mark.
Other standards and guidelines	EN 60529: Degrees of protection by housing (IP code) EN 61010: “Protection Measures for Electrical Equipment for Measurement, Control, Regulation and Laboratory Procedures”. EN 61326 (IEC 1326): Electromagnetic compatibility (EMC requirements) NAMUR NE 21: Association for Standards for Control and Regulation in the Chemical Industry

Ordering information

The E+H service organisation can provide detailed ordering information and information on the order codes on request.

Accessories

Various accessories, which can be ordered separately from Endress+Hauser, are available for the transmitter and the sensor. The E+H service organisation can provide detailed information on request.

Supplementary documentation

- System Information Promag (SI 028D/06/en)
- Technical Information Promag 23 P (TI 049D/06/en)
- Operating Instructions Promag 23 (BA 045D/06/en and BA 050D/06/en)
- Supplementary documentation on Ex-ratings: ATEX, FM, CSA, etc.

Subject to modification

Endress+Hauser
Gmbh+Co.
Instruments International
P.O. Box 2222
D-79574 Weil am Rhein
Germany

Tel. (07621) 975-02
Tx 773926
Fax (07621) 975 345
http://www.endress.com
info@ii.endress.com

Endress + Hauser
The Power of Know How

TI 051D/06/en/08.01
50097004
FM+SGML 6.0